Administrative Management Systems, Inc.
Administrative Office
PO Box 730, 205 West Main
Sackets Harbor, NY 13685
Phone: (315) 646-2234
E-mail: staff@amscert.com

PROCEDURAL GUIDE

(IGCC® Document ID-07)
INSULATING GLASS CERTIFICATION COUNCIL AND INSULATING GLASS MANUFACTURERS ALLIANCE IGCC®/IGMA® CERTIFICATION PROGRAM FOR SEALED INSULATING GLASS

1.0 FOREWORD

Acceptance of certified sealed insulating glass comes with the conviction that such certification assures a high level of quality and the integrity of the identifying mark or certification label is being reliably maintained by a competent certifying agency.

The existing ASTM specification(s) for sealed insulating glass provides a sound technical basis for the required quality of sealed insulating glass. With the addition of independent administration plus periodic routine in-plant visits and product evaluation, a program of product certification is developed in accordance with accepted standards. The certification program described here is predicated upon the concept of independent and impartial administration of the certification procedures in the IGCC® license agreement.

To ensure administration of the certification program in a uniform and equitable manner, this procedural guide has been prepared for the information and guidance of the licensees.

It should be noted that the "IGCC® License Agreement" is the governing document for operation of the certification program. This procedural guide, which is not an extension of that document, serves merely to describe the administrative procedures and routine operation of the certification program.

The standards utilized in the IGCC®/IGMA® program for authorizing certification to is the **ASTM E2190-10** (Modified 2/2003)

2.0 GENERAL INFORMATION

The Certification Concept

The IGCC®/IGMA® Certification Program is based upon the conviction that no standard of quality is good without the continuous adherence of the licensees to that standard. To buyers, specifiers, code officials and users, the IGCC®/IGMA® certification label offers the

manufacturers assurance that his sealed insulating glass units have been produced in conformance to the ASTM specification(s).

Who Can Participate?
Every manufacturer of sealed insulating glass is eligible, on a voluntary basis, to participate.

Who Conducts the Program?
The Insulating Glass Certification Council (IGCC®) and the Insulating Glass Manufacturers Alliance (IGMA®), are the sponsors of this certification program. Under License with IGMA®, IGCC® administers and Governs the certification program under which the Administrator periodically checks and reports compliance of the manufacturers of products having the IGCC®/IGMA® certification label.

Administration
Administrative Management Systems, Inc. (AMS) is the independent administrator of the certification program. AMS maintains the IGCC®/IGMA® office of certification and handles the routine day-to-day business. All transactions are done in the name of IGCC®/IGMA®.

How Can You Become a Licensee?
The following steps must be accomplished before IGCC®/IGMA® can authorize a manufacturer to use the IGCC®/IGMA® permanent label: (Modified 8/2009)

a) The manufacturer must present a passing prototype report from an approved IGCC®/IGMA® testing laboratory to the office of certification. Fabrication of prototype test samples shall be witnessed by a representative of the Administrator during a plant audit, at which time the manufacturers compliance with IGCC®/IGMA® Quality Assurance requirements is validated. (See *Section 10.0*)

b) The manufacturer signs a copy of the IGCC® License Agreement and sends it to the office of certification. IGCC® will countersign this copy and email it to the licensee.

c) The licensee sends the office of certification the necessary certification fee.

d) After receipt by the office of certification of the above, the administrator validates that particular model and sends to the licensee a "Notice of Authorization to Use the IGCC®/IGMA® Permanent Label." The permanent label must be affixed on each certified sealed insulating glass unit.

e) The certified model will then be listed in the next published Certified Products Directory and on the IGCC® website at www.igcc.org.

3.0 HOW THE CERTIFICATION PROGRAM WORKS

American Society for Testing and Materials (ASTM) has test methods and specifications for sealed insulating glass. Sealed insulating glass must meet or exceed the applicable specification before it can be certified.

Recognized independent testing laboratories conduct all tests. The certification committee shall approve all laboratories, whose test reports are utilized by this certification program.
As the sole judge of compliance with the applicable specifications, the administrator authorizes a product, which has been approved to be listed in the Certified Products Directory.

Licensees label sealed insulating glass units in accordance with the labeling requirements established by the Certification Committee.

Approved products are listed in the Certified Products Directory, which is published every six months. It is sent to door, sash and building manufacturers, glazing contractors, homebuilders, architects, regulatory agencies and code-making groups, etc. Directory listings contain the licensee's name, plant location and product description.

The administrator verifies the production at the licensee's manufacturing location during twice per year audits. Audits are performed by a representative of the administrator. During each of these audits, the manufacturer's compliance with IGCC®/IGMA® Quality Assurance requirements is validated (See *Section 10.0*). The prototype test report must be submitted within one year of the report date in order for the report to be considered as the test for the first year, two audits will take place at which time the auditor will compare current production with the product authorized to use the IGCC®/IGMA® permanent label. At the discretion of the administrator, when a licensee is located outside of North America and test sample fabrication is not required, one audit in a given year may be performed internally by personnel of the licensee. In this case the required audit information will be transmitted to the licensee's internal auditor and upon completion reviewed by the administrator.

During the first audit in the second year, specimens will be fabricated for testing. IGCC®/IGMA® will ask the manufacturer to produce a minimum of thirteen test specimens. The fabrication of these test specimens is witnessed and verifies that they are produced in accordance with the construction certified. During test specimen fabrication, only the IGCC®/IGMA® auditor and employees of the licensee being audited shall be present. The licensee is instructed to send these test specimens to an approved IGCC®/IGMA® testing laboratory where they are tested. The specimens must be shipped to the laboratory within four weeks of fabrication. Tests are made at the laboratory recommended by the licensee and selected by the administrator from the approved list.

A monthly report listing the status of testing is provided to the licensee by the office of certification on the 15th of each month. Upon completion of the test, the administrator e-mails results promptly to the licensee.

After initial certification (Prototype) testing, ASTM E2190 testing shall occur annually for the first 2 years of certification. If no failures occur, then testing may occur once every 2 years, at the discretion of the participant. Except for prototypes, upon fabrication, test specimens, and related information and reports, become the property of the certification program (IGCC). (Modified 5/3/2017)

4.0 COMPLIANCE SAFEGUARDS

How is Compliance Assured?

Any certified product found in the course of routine audit and evaluation not to be in compliance with the model description or quality assurance requirements is subject to having authorization to use the IGCC®/IGMA® permanent label removed. The licensee is sent a request for clarification giving 30 days in which to demonstrate to the satisfaction of the administrator that the product is in compliance with the model description that is certified. If the licensee does not respond, a warning of possible removal of authorization to use the IGCC®/IGMA® permanent label is sent giving an additional 30 days to respond. If the licensee does not respond, authorization to use the IGCC®/IGMA® permanent label is **automatically terminated** at the end of that 30-day period.

In the case of a routine test failing to comply with the specifications, the licensee will be officially notified that within 15 days they must respond by stating that a retest fabrication is requested and by paying all administrative and test fees. If there is no response within the 15 days, authorization to use the IGCC®/IGMA® permanent label is **automatically terminated**. If the retest option is accepted, the administrator will perform an audit and witness fabrication of the retest specimens within 45 days. (See *Section 12* guideline G.16)

Challenging a Certified Product

Complaints of non-compliance from any corporation or business source will be investigated promptly upon receipt of the complaint in writing along with an appropriate surety deposit. A minimum surety deposit of $1,500 will be required for each complaint of non-compliance. The surety deposit will be assessed at the rate of $300 per man-day plus the reasonable cost of travel and other expenses entailed in resolving such incidents. Refunds of part or all of the surety deposit will be made when applicable. The surety deposit will cover all costs involved, unless the investigation proved non-compliance, in which case all costs will be borne by the licensee found to be in non-compliance.

Complaints by Consumers

The administrator shall receive and log the complaint. It will be the consumer's responsibility to identify the label, information appearing on the spacer of glass and advise the administrator of the same. Note: If no IGCC®/IGMA® label exists, the product has not been certified by the manufacturer to IGCC®/IGMA® and the administrator and IGCC®/IGMA® have no further responsibilities or options.

Once the consumer has identified the label, name, etc. they should advise the administrator. The administrator shall respond, advising the consumer of the name, address, primary contact, model description and other pertinent information at hand as it pertains to the subject licensee. Note: If the complaint is being made for reasons of product appearance or failure such as glass quality, fogging, seal failure, dust, etc., the consumer shall be advised to contact the licensee for manufacturer directly. Some manufacturers and their dealers or distributors offer warranties on their products. Normal claims, procedures and legal remedies are available to consumers on a state-by-state basis.

If the consumer wishes to determine whether or not a labeled product is in compliance with the model described through an investigation by IGCC®/IGMA®, the corporation or business challenge procedure shall be utilized. The surety deposit shall be modified to $400 and charges per man-day and shall be assessed against the surety deposit in the amount of $300 plus reasonable travel costs and other expenses.

Withdrawal of Certified Product

Any product which has been authorized to use the IGCC®/IGMA® permanent label may be voluntarily withdrawn from the Certification Program by the licensee at any time. (Modified 8/2009)

5.0 COSTS

What Does the Program Cost?

The initial administration fee will be based on the date of authorization to use the IGCC®/IGMA® permanent label in a manner that participation in the Certification Program will be on a February 1 to January 31 basis thereafter. If the authorization date is between August 1 and December 1, 50% of the administration fee for the first year will be charged for participation and will include one audit prior to the following February 1 date. A licensee is invoiced for each item that is certified and listed separately in the Certified Products Directory. An additional invoice for testing laboratory fees will be issued upon fabrication of test units. For current fee schedule, contact the Administrative office or visit www.igcc.org.

Testing of these units will not begin until payment has been received. Should failure of these units occur during certification testing, any remaining balance will be refunded to the licensee upon request. (Modified 8/2009)

6.0 DOCUMENTS AND AGREEMENTS

License Agreement

This agreement, incorporating independent program administration and routine, periodic, independent plant audits, sampling and evaluation, governs the relationship between IGGC® and the licensee.

Future amendments or revisions to the License Agreement will be recommended by the Certification Committee and enacted by the IGCC® Board of Governors.

Effective Date, Duration, and Termination

The License Agreement becomes effective on the date of its execution, has an initial duration of twelve months (adjustable to a February 1 to January 31 basis), and is automatically renewed for successive twelve-month periods, unless either party gives notice, at least sixty days prior to date of expiration, that cancellation is requested or unless revoked by IGCC® for causes set forth in the document.

Administrative Service Agreement

This agreement entered into by IGCC® and Administrative Management Systems, Inc. (AMS) governs the relationship between IGCC® and AMS, the independent administrator. In general, it provides that the administrator:

a) Routinely audits licensee manufacturing facilities twice per year, and during the first audit in the second and subsequent years, witnesses fabrication of specimens for testing at one of the IGCC®/IGMA® approved testing laboratories;

b) Has the right to witness any and all testing;

c) Reviews all test reports in order to determine compliance of the certified product with the specifications;

d) Audits and recommends for approval, all test laboratory facilities for use in this certification program Test laboratories are recognized or approved by the Certification Committee;

e) Publishes and mails/emails the IGCC®/IGMA® Certified Products Directory twice each year and handles all routine clerical duties of IGCC®/IGMA® with respect to certification matters;

f) Acts as IGCC® treasurer, invoicing licensees, maintaining a bank account and dispersing funds (fiscal reports are made to the Board of Governors);

g) Attends all scheduled meetings of the Certification Committee; and

h) In all of its actions acts in the name of IGCC®.

IGCC®/IGMA® Administration Services and Exclusive Licensing Agreement

This agreement defines the relationship where IGMA® and IGCC® desire to combine the administration and marketing of their two certification programs into one certification program administered and governed by IGCC® under which both the IGCC® Mark and the IGMA® Mark are licensed to certification program participants meeting the requirements ("IGCC®/IGMA® Certification Program")

Procedural Guide

This guide outlines program procedures in accordance with the provisions of the License Agreement and the Administrative Service Agreement, for the guidance of those concerned with the procedural details of the Certification Program's operation. It covers the steps to be taken in any given procedural situation in the interest of equitable and uniform treatment of licensees and the preservation of the integrity of the certification program.

Certified Products Directory

This directory is the one document and publication that is normally in the public's eye and contains a listing of the certified seal insulating glass units of each licensee.

Certification Label
The licensee permanently affixes this certification mark to each unit of certified sealed insulating glass. This certification mark may be reference to the Licensee's listing in the Certified Products Directory. The listing then provides a product description including the company name, plant location, etc. (Modified 8/2009)

7.0 PROGRAM RESPONSIBILITY

IGCC® Board of Governors
The IGCC® Board of Governors overall responsibility is for the well-being and acceptance of the Certification Program by the industry, building officials and the public. It also bears legal corporate responsibility.

IGMA® Board of Directors
The IGMA® Board of Directors may make recommendations to the IGCC® Board regarding the IGCC®/IGMA® Certification Program and may appeal any decision of IGCC® regarding certification or the IGCC®/IGMA® Certification Program.

IGCC® Certification Committee
The IGCC® Certification Committee has the responsibility for the general procedure and policy pertaining to operation of the Certification Program. As a part thereof, it: (Modified 8/2009)

a) establishes "guidelines",
b) determines the applicability of the specifications in a specific situation where a question is raised by a licensee or the administrator,
c) approves test laboratories,
d) determines which of the specifications are to be designated effective for the purposes of product certification and the date or dates on which they become effective, and
e) recommends to the IGCC® Board of Governors changes to be made in the License Agreement.

8.0 LABEL REQUIREMENTS

THE IGCC®/IGMA® CERTIFICATION LABEL MUST BE PERMANENTLY MARKED ON A VISIBLE PORTION OF EACH SEALED INSULATING GLASS UNIT OR IT IS NOT CERTIFIED BY THE MANUFACTURER TO THE PUBLIC. The label shall be etched, sand blasted, embossed, printed, painted or otherwise permanently marked on the spacer or at least one component pane of the sealed unit. (See Note #1 below)

This label must be visible after installation in the building. The IGCC®/IGMA® permanent label must be in block capital letters and have a minimum height of 0.050 inches (1.27 mm). The letters IGCC®/IGMA® must be followed by the ® registration mark or a close facsimile, i.e., IGCC®/IGMA®. The IGCC®/IGMA® permanent label must contain the company identification (company name, trade name or company code), plant code*, registered "IGCC®/IGMA®" mark and a date code spanning no more than a 12-month period, plus or

minus three months. The date code should commence with the beginning of each calendar year (effective for both the beginning and the ending of each period). Outdated spacers may be hand stamped to bring the label up to date. The plant code will only be required when there is more than one plant with an IGCC®/IGMA® certified product operating under the same company name. The IGCC®/IGMA® permanent label must be affixed to certified products only at the time and place of manufacture. The labeling must be approved by the administrator. The permanent label must be affixed only to the sealed insulating glass units of the licensee's own manufacture which have been certified by the manufacturer through IGCC®/IGMA®.

The permanent label must not be sold, transferred or otherwise disposed of in any manner other than being affixed to the licensee's certified production. The permanent label must not be affixed to any product from which certification has been withdrawn or which is produced with a process basically different from the one used when certification was obtained.

Example of Minimum Label:
ABC Glass Co.(*) IGCC®/IGMA® '18

The IGCC®/IGMA® permanent label is listed under each company's name in the "Certified Products" section of this directory.

* A plant code will only be required when there is more than one plant with an IGCC®/IGMA® certified product operating under the same company name.

Note#1:

When an NFRC certified window, door, skylight fabricator also fabricates IGCC®/IGMA® certified IG units and glazes these IG units into their own NFRC certified product, the IGCC®/IGMA® permanent label may appear on the window, door, skylight NFRC permanent label in lieu of the IGCC®/IGMA® permanent label appearing on the actual IG unit. IGCC®/IGMA® required label content and NFRC permanent label requirements shall apply. (Modified 8/2010)

For Example:

NFRC 123 - N - 456

ABC Windows - Dallas IGCC®/IGMA® 2018

9.0 ADVERTISING GUIDELINES

The following concepts are important to remember whether you are a participant, licensee in the IGCC®/IGMA® Certification Program, or a supplier to the sealed insulating glass industry. This discussion is intended to provide you with an accurate background description of the IGCC®/IGMA® Certification Program, to help you avoid making possibly misleading,

deceptive, or ambiguous statements regarding the program in the advertising of your products. (Modified 8/2009)

1) IGCC®/IGMA® is the sponsor of a certification program. IGCC®/IGMA® does not certify products.

2) The administrator audits laboratories and checks their equipment, audits licensees' production and fabrication of specimens, and validates test reports and certification claims.

3) Laboratories test specimens to specific test methods and specifications referenced by IGCC®/IGMA®

4) Manufacturers/licensees "certify" their products, affirming that their products are constructed similarly to specimens which were audited, tested and found to pass the stated criteria. A Licensee's Certification Statement is the imprinting, sandblasting, etching or other form of permanent marking of an IGCC®/IGMA® certification program designation and number to its product.

5) The IGCC®/IGMA® Certification Program does not have "members," inasmuch as the term "members" carries with it a connotation that some detailed criteria must be met in order to participate in the organization. Under the IGCC®/IGMA® concept, anyone can participate, and "participants" simply must possess a "legitimate interest in the purposes of IGCC®/IGMA®." Manufacturers, on the other hand, which are "fabricators of sealed insulating glass units," become participants by virtue of executing a License Agreement with IGCC®. Any manufacturer of insulating glass may voluntarily enter into a License Agreement, provided that they intend to certify at least one product under the IGCC®/IGMA® Certification Program. Thus, the proper term to use for a manufacturer participant is "Licensee." A manufacturer, with a prototype in progress, is termed a "Candidate Licensee."

6) Unit specimens, not their components, are tested under the IGCC®/IGMA® program. Thus, if you are a supplier to the industry, statements indicating that your components have complied with the test methods would be incorrect. A better nomenclature for example, would be, that "Units tested to ASTM E2190 contained our X component have been found to meet the requirements of the specification(s)."

7) Should you have any questions concerning the IGCC®/IGMA® Certification Program, please contact:

Insulating Glass Certification Council
Mr. John G. Kent
PO Box 730, 205 West Main Street
Sackets Harbor, NY 13685
Telephone: (315) 646-2234
E-mail: staff@amscert.com

10.0 QUALITY ASSURANCE PROGRAM

IGCC®/IGMA® require licensees to have a working quality assurance program for the fabrication of insulating glass. As a minimum, the licensee's quality assurance system must comply with the general requirements of IGMA TM-4000-02(07) "Insulating Glass Manufacturing Quality Procedures Manual" which established 1) general requirements for quality systems and 2) provides practical solutions for implementing such a system. IGCC®/IGMA® requires compliance to these general requirements of IGMA TM-4000-02(07) "Insulating Glass Manufacturing Quality Procedures Manual" but does not define the specifics of the quality assurance system which should be appropriate for the type, range and volume of work performed.

Adherence is verified during twice per year plant visits. These requirements were adopted to improve the overall quality of IG units in the program, and also to satisfy requirements established by the Department of Housing and Urban Development, HUD, the National Fenestration Rating Council (NFRC) and other regulatory and consumer driven organizations.

A licensee's QA program shall comply with IGMA TM-4000-02(07) "Insulating Glass Manufacturing Quality Procedures Manual" which establishes requirements for the following: (Modified 02/03/2015)

1) A quality systems manual
2) A designated person responsible for quality assurance
3) Process Control
4) Inspection and Testing (Spacer, Desiccant, Sealant, Gas Fill, Finished Product, Glass)
5) Calibration
6) Non-Conforming Products and Corrective Action
7) Storage and Handling
8) Field Service
9) Internal Quality Audits
10) Training
11) Statistical Techniques

11.0 GAS CONTENT INITIAL AND AFTER WEATHERING CERTIFICATION AND TESTING (GCIA)

A licensee must certify to seal durability requirements to participate in the gas content program. The IGCC®/IGMA® Gas Content program is voluntary if gas content units will NOT use IGCC®/IGMA® marked spacer, but is mandatory if IGCC®/IGMA® marked spacer will be used for gas content units. The program is intended to demonstrate a licensee's ability to

initially fill to a minimum level and the ability of the construction of the IG unit to retain a minimum gas content level after exposure to the ASTM E2190 weathering cycle.

Licensees meeting a tested initial gas content of 90% or greater and a final after weathering gas content of 80% or greater shall be identified in the Certified Products Directory (CPD) with the designation "GCIA" for "Gas Content, Initial and After Weathering". Both initial and after weathering gas content must be compliant in order to be listed as "GCIA". The gas content certification process will be as follows: (Modified 8/2010)

1) The normal minimum of thirteen (13) 14x20-inch (355x505 mm) test units for seal durability, fifteen (15) for multiple air space units, shall be fabricated under auditor witness during normal durability certification fabrication audits. All test units shall be gas filled with argon. All multiple air space units shall have both cavities filled and tested. Per guideline G.19 as applicable, coated glass shall be used and multiple air space units shall have coated glass as the center lite for at least ten (10) test units intended for testing in accordance with ASTM E2188 and have coated glass on at least one outer lite for at least four (4) test units intended for testing in accordance with ASTM E2189. The test lab shall randomly select ten (10) units for initial gas content testing except that units containing internal components (IC) (i.e. grills or muntins) shall not be considered for testing. Units shall be inspected for any damage, and any damaged units not used. Testing for gas content after weathering shall be performed on the six (6) ASTM E2190 weathering test units.

2) Production Units – As of 6/23/2010 selection and testing of production units is not required.

3) Units shall be tested for initial and after weathering gas content percent by non-destructive spark emission spectrography (SES) in accordance with ASTM E2649 Determining Argon Concentration in Sealed Insulating Glass Units Using Spark Emission Spectroscopy. Up to two (2) test units (14" x 20") may be used to replace any unit broken in shipping or handling.

4) Laboratories shall report results of testing as "percent initial gas content" and "percent after weathering gas content" to the nearest whole percent.

5) The calculation of percent initial gas content shall be the average of all ten (10) units tested. The calculation of percent after weathering gas content shall be the average of all six (6) weathered test units.

6) To be listed as complying with gas content certification, initial and after weathering (GCIA) the average gas content level must be 90% or greater initially and 80% or greater after weathering, and each of the tested units shall have a gas concentration of 50% or greater. These levels were selected as levels that can reasonably be reached by insulating glass fabricators on a consistent basis. It takes into consideration a) variations that may occur in the filling process, and b) variations that may occur in the testing process. If a licensee feels that its gas content is consistently greater than these gas content values, the licensee can include this information in the licensee's literature.

7) It is recognized that actual production units may not necessarily be 90% or greater initial gas content but shall meet the manufacturer's stated initial content values.

8) Special arrangements need to be made if regulatory compliance is required for gas content other than argon.

12.0 CERTIFICATION GUIDELINES AND INTERPRETATIONS

For guidance in labeling and certifying sealed insulating glass units the Certification Committee has adopted the below guidelines.

Additionally, certain topics that required added explanation and clarification have been presented in a series of Certification Notes as referenced. These Certification Notes are available on the IGCC®/IGMA® website (www.igcc.org) or by contacting the administrative office.

ID #	Title	Initial Publish Date	Approval Date
CN IG 1009	Certification of Internal Components (IC)	10/28/09	1/31/12
CN IG 1109	Certification of Capillary Tube, Breather Tube Systems	10/28/09	10/28/09
CN IG 0310	Certification of Multiple Air Space Units	3/1/10	3/2/11
CN IG 1010	Interim Certification	10/14/10	3/1/11
CN IG 0211	Certification and Testing of Vacuum Insulating Glass VIG	2/18/11	1/31/12
CN IG 0112	Desiccant Quantity Review of Changes (ACPF)	1/31/12	10/31/12

ALWAYS

12.1 The following situations permit the licensee to **always** certify the sealed insulating glass units with the same IGCC®/IGMA® number.

12.1.1 GLASS

A.GL.1
Any change in glass thickness from that tested. (Modified 3/15/2006)

A.GL.2
Any change in glass tint or color from that tested (clear glass is required in test specimens).

A.GL.3
Any change in glass size from that tested (14 by 20 inches is required for test specimens).

A.GL.4
Any change in glass type (i.e. tempered, heat strengthened, laminated or patterned glass) from that tested (annealed glass is normally used in all test specimens).

A.GL.5
Any change in glass shape from that tested (rectangular glass is required in test specimens). This guideline permits the same IGCC®/IGMA® number for triangular, circle head, trapezoidal and other shapes.

A.GL.6
Any change in glass supplier from that tested.

A.GL.7 (Deleted 3/15/2006)

A.GL.8 (Deleted 3/15/2006)

A.GL.9 (Deleted 3/2/2011)

12.1.2 SPACER

A.SP.1
Any change in air space dimension from that tested (one-quarter inch to one-half inch air space is allowed for testing).

A.SP.2
Any change in spacer wall thickness from that tested.

A.SP.3
Any change in spacer seam design (i.e. butt seam or lock seam) from that tested.

A.SP.4
Any change in supplier of spacer from that tested, everything remaining the same.

A.SP.5
Corners or connections which are soldered, welded, brazed or bent, but uncut, may be used interchangeably with the same IGCC®/IGMA® number. (Adopted 2/19/1985)

A.SP.6
Corners or connections may be changed from mechanical connections (MC) to bent-uncut corners (BC), using the same IGCC®/IGMA® number utilizing joiners or corner keys of plastic, aluminum, stainless, or galvanized steel. (Modified 5/14/2008)

A.SP.7
Any change in spacer profile from that tested. (Adopted 7/29/2004)

12.1.3 INTEGRATED SPACER SYSTEMS

Defined as a pre-fabricated multi-component, multi-material and/or multi-function spacer system. Contact the IGCC®/IGMA® Administrative Office for the most current list of reviewed integrated spacer systems and their generic class.

A.SS.1
A licensee may certify a thermally broken Integrated Spacer System (ISS) on the "IGCC®/IGMA® List of Reviewed Integrated Spacer Systems" utilizing the same IGCC®/IGMA® number as the base spacer generic material (single homogeneous component) provided regular test units include the thermally broken ISS, all other guidelines applicable. (Adopted 1/31/2012)

A.SS.2
A licensee may use a temporary alternate integrated spacer system on the IGCC®/IGMA® list of reviewed integrated spacer systems (most current version) in the same generic class by a) notifying the administrator of the change, b) having test specimens witnessed by the administrator's representative at the next regular audit, and c) sending the test specimens to an IGCC®/IGMA® approved testing laboratory within four (4) weeks of the test specimens' fabrication date. However, Guideline G.26 shall apply where applicable. The licensee may temporarily use the certification label on a provisional basis commencing with written notification from the administrator and ending when test results are received by the administrator. (Modified 1/31/2012)

12.1.4 DESICCANT

A.DE.1
A manufacturer may use the same IGCC®/IGMA® number on production units having air space thickness equal to, or greater than the model tested provided the desiccant Adsorption Capacity per Perimeter Foot (ACPF) remains the same (-10%) or is greater. A manufacturer may use the same IGCC®/IGMA® number on production units having an air space thickness smaller than the model tested provided the manufacturer maintains the same or more sides filled with desiccant (Modified 1/31/2012)

A.DE.2
A change in supplier or model of the same generic type of desiccant from that tested will not require a different IGCC®/IGMA® number provided the new material is on the list of IGCC®/IGMA® reviewed desiccants and the ACPF is maintained or increased. However, Guideline A.SS.2 shall apply where applicable. (Modified 10/28/2015)

A.DE.3
The use of the same loose fill desiccant manufactured in different particle size ranges will not require a different IGCC®/IGMA® number. (Modified 1/31/2012)

A.DE.4 (Deleted 1/31/2012)

A.DE.5 (Deleted 1/31/2012)

A.DE.6 (Deleted 1/31/2012)

12.1.5 SEALANT

A.SE.1
Any increase in moisture vapor transmission path length is an acceptable alternate for labeling.

A.SE.2
A licensee may use a temporary alternate sealant on the IGCC®/IGMA® list of reviewed sealants (most current version) in the same generic class by a) notifying the administrator of the change, b) having test specimens witnessed by the administrator's representative at the next regular audit, and c) sending the test specimens to an IGCC®/IGMA® approved testing laboratory within four (4) weeks of the test specimens' fabrication date. The licensee may temporarily use the certification label on a provisional basis commencing with written notification from the administrator and ending when test results are received by the administrator. (Modified 6/23/2010)

12.1.6 GAS CONTENT

A.GC.1
Any change in gas from that tested providing 1) the same gas filling fabrication process is used; argon is required for each regular testing, and 2) a one-time after weathering gas content test is done for each exotic gas other than argon (acceptable methods of test shall be GC, SES, O2 analyzer, other acceptable to IGCC®/IGMA®). This guideline shall become effective as of 1/2/2020 in consideration of a pilot program. (Revised 1/30/2017)

NEVER

12.2 The following situations never permit the licensee to certify with the same IGCC®/IGMA® number. They require the use of a different IGCC®/IGMA® number.

12.2.1 SPACER

N.SP.1
A change in spacer material, i.e. aluminum to steel or any other material will require a different IGCC®/IGMA® number.

N.SP.2
A change in spacer surface finish, i.e. anodized to mill finish or hot dip to electro galvanized will require a different IGCC®/IGMA® number.

N.SP.3
A change in corner design from soldered, welded, braised or (bent BC) to mechanical corner (MC) will require a different IGCC®/IGMA® number. (Modified 5/14/2008)

N.SP.4
A change in corner key material to another material, except to the same material as the spacer, will require a different IGCC®/IGMA® number. All plastic keys and joiners are considered generically equivalent. This guideline does not apply to A.SP.6. (Modified 5/14/2008)

N.SP.5
If bent, uncut spacer corners or connections (BC) are changed to mechanically fastened spacer corners (MC); a new IGCC®/IGMA® number is required. (Modified 5/14/2008)

12.2.2 DESICCANT

N.DE.1
A change in generic type of desiccant will require a different IGCC®/IGMA® number. For purpose of desiccant guidelines, the generic types of desiccant are 1) LF=Loose Fill desiccant, 2) IB=Imbedded desiccant system, 3) MX=Desiccant Matrix. (Modified 1/31/2012)

12.2.3 SEALANT

N.SE.1
In a single sealant system, a change in generic type of sealant will require a different IGCC®/IGMA® number.

N.SE.2
In a two sealant system, a change in generic type of primary sealant will require a different IGCC®/IGMA® number.

N.SE.3
In a two sealant system, a change in generic type of secondary sealant will require a different IGCC®/IGMA® number.

N.SE.4
Any decrease in the minimum design moisture vapor transmission path length will require a different IGCC®/IGMA® number.

N.SE.5
Any increase in thickness of design moisture vapor transmission path (glass to spacer dimension) will require a different IGCC®/IGMA® number.

12.3 CLASS I - UNIT MODIFICATION

DEFINITIONS
Breather Tube - Tube inserted into the I.G. spacer and intended to be sealed prior to glazing of the unit.

Capillary Tube - Tube inserted into the I.G. spacer and intended to be left permanently open.

Capillary, Tube and How It Is Related to Membrane - IGCC®/IGMA® observes that organically sealed insulating glass units are not actually hermetically sealed, but rather are composed of sealing systems which demonstrate sufficiently low water and gas transmission rates as to pass the accelerated weathering conditions imposed in ASTM standard(s). We acknowledge that certain capillary tube designs may also control the passage of water and gases in such a manner as to allow breathing but still demonstrate the ability to pass the test conditions.

G.0 Capillary Tube (Permanently Open Tube)
An I.G. construction incorporating a permanently open capillary tube will be considered and listed for durability as equivalent to a previously IGCC®/IGMA® program durability certified I.G. model without a capillary tube, provided the following applies: (Modified 10/28/2009)

a) Material and construction of the units are identical, except for the inclusion of the capillary tubes.

b) Both sets of I.G. units reach the same performance level when tested according to ASTM standard(s). The units with capillary tubes need only be tested once.

c) The test must be run by an IGCC®/IGMA® approved lab. Unit installation instruction must be supplied to the lab.

d) Preparation of test specimens need not be witnessed. However, the test result must be reviewed and approved by the administrator.

G.1 Breather Tube (Temporarily Open Type)
A licensee is permitted to insert the open end of a breather tube in a bag or container of desiccant during shipment of a specimen to the test laboratory for durability testing. The breather tube must be sealed prior to testing. Unit installation/sealing instruction must be supplied to the lab. (Modified 10/28/2009)

G.2 Breather Tube (Temporarily Open Type)
The addition of a breather tube is acceptable, for shipping only, even though not in the durability test specimen. The breather tube should be properly sealed before installation. Unit installation/sealing instructions must be supplied to the lab. (Modified 10/28/2009)

G.3 Edge Protection

The addition of edge protection such as metal banding, metallic foil, barrier coat, etc., is acceptable with the same IGCC®/IGMA® number.

G.7 (Deleted 1/1/2007)

G.8 Internal Components (IC)

A minimum of three (3) of the thirteen (13) double pane, five (5) of the fifteen (15) multiple airspace test specimens shall be constructed utilizing all of the components of an internal components (IC) system, which are used in the ultimate product. Such systems may include but are not limited to blinds, films, decorative glass inserts, grills and muntins. These units shall be used for volatile fog testing in accordance with ASTM E2189. When testing muntins or grills, test samples shall be fabricated dividing the sample into nine equal areas (3 by 3). A licensee may use the same IGCC®/IGMA® number for units manufactured without internal components (IC) providing regular testing has been accomplished in accordance with the above procedure. (Modified 1/31/2012)

G. 15 Multi-Cavity

Multiple air space units may be certified with the same IGCC®/IGMA® number as single air space units, provided that the construction of each space complies with the guidelines for single space units; pressure communication of spaces is permitted, but not required. This guideline shall apply to multiple air space products that use glass or a suspended coated film (SCF) as an airspace barrier. Testing of multiple air space units shall be performed initially and in lieu of single air space unit testing at least once each (4) years. When testing multiple air space units with coated glass, the coated glass shall be on at least one outer lite for the units intended to be tested for volatile fog in accordance with ASTM E2189. (Modified 6/23/2010)

G. 17 (Deleted 1/1/2007)

G. 18 (Deleted 1/1/2007)

G. 19 Coated Glass

An Insulating glass unit constructed with coated glass with the coating toward the air space (pyrolytic or sputter coated) shall be certified utilizing the same IGCC®/IGMA® number provided regular test units include one lite of the coated product per test sample. Only the highest volume coated product need be tested. Testing of sputter coated non-edge deleted will cover sputter coated edge deleted, Pyrolytic and uncoated (clear). Testing of sputter coated edge deleted will cover Pyrolytic and uncoated. Testing of Pyrolytic will cover Pyrolytic and uncoated. Testing uncoated (clear) will only cover uncoated (clear). When testing multiple air space units with coated glass, the coated glass shall be on at least one outer lite for the units intended to be tested for volatile fog in accordance with ASTM E2189. (Modified 6/23/2010)

G.26 Adsorption Capacity per Perimeter Foot (ACPF)

For all Certified Products and prototypes for Certification testing, the fabricator shall have on file a copy of the **Desiccant supplier's specification showing the minimum equilibrium water adsorption capacity (weight %) as measured at 25 ^{o}C (77 ^{o}F) and 50% Relative Humidity (+/- 5%)**. Additionally, the fabricator shall document the weight of desiccant or

desiccant system (grams) in the certified product or prototype. From this data, the fabricator shall document the adsorption capacity per perimeter foot (ACPF) using the following formula: (Modified 1/31/2012)

$$\text{ACPF (grams/ ft.)} = \frac{\text{Weight of Desiccant Product (g) x Adsorption Capacity (wt \%)}}{\text{Perimeter (Feet) x 100}}$$

Note: For all 14 x 20 inch test specimens the perimeter is 5.66 feet

G.27 Structural Modification, i.e. Hole for Gas Fill; Electrical Connectors or Conductors
A sealed insulating glass unit that has been structurally modified, (i.e. hole or holes for gas filling (AP), connectors or conductors that penetrate the seal (primary or secondary) (SP)) shall be tested regularly for certification assembled with standard production procedures including these modifications. (Modified 5/7/2014)

G.29 IG Integrated Sash Technology
When testing IGCC®/IGMA® units using IG Integrated Sash Technology, IG fabricators would have the option of testing integrated IG units in one of two methods: 1) glass size shall be 14x20-inch and the sash shall be cut away to fit in a 14x20-inch testing opening, or 2) a larger sash which accommodates 14x20-inch glass may be tested. This option would need to be reviewed with the test lab ahead of time to ensure the test chamber can accommodate the larger sash size. All testing is completed with no glazing beads and all fabrication holes or simulated hole punches in place. If the sash is cut away, this function must be performed by the IG fabricator. (Adopted 5/3/2005)

G.30 Applied Surface Coatings to an IG Spacer and Spacer Components
An insulating glass unit utilizing an applied surface coating to an IG spacer and spacer components shall be initially certified under the normal certification testing process. The application of the coating will be documented in the product audit report. A surface coating may be added to or removed from an already certified product utilizing the same certification number by applying guideline G.5. Applied surface coatings would include, but not be limited to paints, coatings and adhesion promoters. Spacer and spacer components with an embedded or etched into the surface color are not subject to this guideline and may be certified with the same IGCC®/IGMA® number. (Modified 3/2/2011)

G.32 GCIA and Capillary and Breather Tubes and Systems
(Refer to guideline(s) G.0, G.1, and G.2) An IG construction incorporating a permanently or temporarily open system or tube, (Capillary, breather or other) may be Gas Content Initial and After Weathering certified (GCIA) with the same IGCC®/IGMA® number provided regular test units include all the components of the system or tubes. Unit installation and/or final sealing instructions must be supplied to the laboratory and performed at the laboratory. (Modified 8/6/2013)

G.34 Bent or Curved IG Units
Special note should be taken that the ASTM E2190 test method does not provide for testing of Bent or Curved IG units. As such, it is only flat IG units that fall within the IGCC®/IGMA®

Certification Program. This, however, in no way precludes the ultimate use of Bent or Curved IG units. Labeled spacer may be used in IG units, other than flat glass, but in that case, certification does not apply. (Adopted 3/2/2011)

G.37 Point Support Aperture

Point support aperture units may be certified with the same IGCC®/IGMA® number as the base model, non-point support units, provided construction of the units are the same except for the point support aperture and testing of point support units shall be performed initially and in lieu of the base model, non-point support unit, at least once each (4) years. Only one point support aperture shall be present in each test unit and the center of the support shall be located 6-inches +/- ½-inch on the unit diagonal. Any components fixed to the IG by the IG fabricator and associated with the aperture shall be included in the test units. Changes in the shape or geometry of the through hole will not require retesting, but changes in the generic material of the seal will require retesting. (Adopted 5/4/2017)

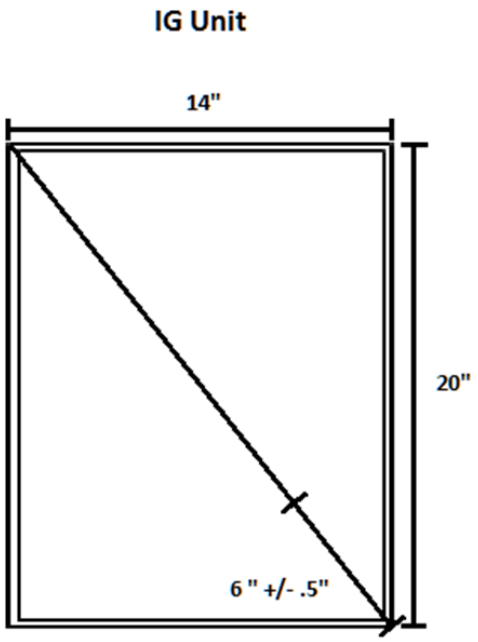

12.4 CLASS II - SPECIMEN

G.6 Specimens – Quantity

No more than 4 additional test units shall be labeled by the auditor for testing (13 units required for double pane and 15 units required for multiple air space.) When gas content testing (GCIA), ship the additional auditor "labeled" units to the testing laboratory. (Modified 8/23/2007)

G.9 Specimens - Production (Deleted 1/1/2007)

G.10 Specimens - Production
If a licensee is not producing units at the time of an audit a labeled unit from inventory may be cut apart for inspection, provided that the date code is within the audit period.

G.11 Specimens - Production
A portion of the audit will be used to determine whether a licensee is using the IGCC®/IGMA® label on unauthorized units.

G.12 Specimens - Shipment
Units fabricated for test during an audit must be shipped directly to the approved test facility within four weeks of the date of fabrication. If they are not, the audit may be considered invalid and another audit must take place. But for normal in plant quality inspection processes performed by the manufacturer, there shall be no 'pre-testing' of any test sample being forwarded to the approved test facility. In situations where fabricated test units are deemed unacceptable for test by the licensee as a result of a normal plant quality inspection process, the licensee shall be allowed to re-fabricate test samples only once. This re-fabrication must occur within 45 days of the original fabrication. All costs related to this guideline are to be borne by the licensee. (Modified 5/14/2008)

G.14 Specimen Frequency
The prototype test will be considered as the test for the first year of certification (providing application is made within 12 months from the date of the test report). This is effective for matters initiated after May 1982. The next fabrication for testing purposes will be in the first half of the second year. (Modified 1/31/2012)

G.31 Suspension of Testing
There may be situations where the program participant wishes to suspend testing (gas or durability) before completion. For prototype fabrications this shall be at the discretion of the program participant and has no effect on the certification listing. For certified unit testing, with consideration for guideline G.12, any suspension of the test, gas or durability, shall be deemed as a failure of that portion of the test. G.12 would not be applicable once testing has started. (Adopted 5/14/2008)

12.5 CLASS III - EQUIVALENCY

G.5 Gray Area
Situations that are not included in the "Always" or "Never" categories listed above, fall into the gray area. The gray area situation is covered by Minutes item 10.10.77.10 and is repeated here.

When there is a change and the licensee desires to use the same IGCC®/IGMA® number, the licensee shall immediately notify the administrator with all details of the change and also satisfy either 1 or 2 below:

1) Establish equivalency by passing the same level of ASTM test as certified to by:

a) having specimens tested at an IGCC®/IGMA® independent testing laboratory or
b) having specimens tested at an in house (licensee) facility, testing done in house by a licensee must be done under the surveillance of the administrator.

Specimens must be fabricated and submitted to the laboratory within two weeks after notification of the administrator. During the test period, the licensee may temporarily use the certification label on a provisional basis or:

2) Demonstrate the equivalency of the change to the satisfaction of the Certification Committee or a subcommittee. (Specimens not required.)

G.21 Transfer

If a licensee manufactures the same model using the same technology at a different location, a IGCC®/IGMA® number with a temporary status will be issued provided that testing (durability and/or gas content) of the model is initiated at the next scheduled testing audit. This guideline may not be applied to products for which certification has been previously removed due to test failure. (Modified 12/06/2006)

G.23 Equivalency

A licensee needs to establish equivalency for a model only once.

G.24 Vision Glass Areas

Special note should be taken that the ASTM E2190 test method only provides testing for "Vision glass areas." As such, it is only these types of units that fall within the IGCC®/IGMA® Certification Program. This, however, in no way precludes the ultimate use of these units in other applications, e.g. Spandrel units. (Adopted 8/28/1986)

Labeled spacer may be used in IG units, other than vision glass, but in that case, certification does not apply. (Adopted 4/16/1991)

G.28 Certifying Additional Constructions

A current licensee with currently certified products may certify additional constructions or replace a certified construction at the same plant location by having specimens tested at an IGCC®/IGMA® independent testing laboratory. These samples need not be witnessed by an IGCC®/IGMA® representative. Upon completion of passing test results the construction shall be eligible for IGCC®/IGMA® certification. IGCC®/IGMA® witnessed testing must occur at the next regular audit. (Adopted 7/28/1999)

G.33 Duplicate Certification

There may be situations where the program participant wishes to certify separately a model variation for which IGCC®/IGMA® would allow equivalency, both variations under a single certification number. Some examples of this duplicate certification may be dual pane and multiple air space, various moisture vapor transmission path lengths (sightlines), variations in coated glass. This duplicate certification shall be allowed and each variation given a separate certification number. Each certification number will be treated as its own certified model and be subject to normal product fees, testing and auditing requirements.

G.35 Multiple Sources of Same Generic Category

If a licensee regularly uses multiple sources of supply within the same generic category each source of supply (A and B) shall be tested on a rotational basis. If one source of supply (A) is tested and fails to comply, the same source of supply (A) must be tested to maintain certification for that source of supply. If certification for (A) is no longer required by the licensee the retest due to failure must still occur with (B) or a new alternate source of supply (C). (Modified 8/6/2013)

G.36 Sale of Plant and Transfer to New Ownership

When a fabrication facility (plant) with a currently certified IGCC/IGMA product, or pending prototype(s), is sold to new owners, the certification may be transferred to the new owners. The following steps shall be followed for the new owners and plant to maintain IGCC®/IGMA® certification: (Adopted 5/4/2017)

1) Notify the Administrative Office, in writing, when the sale is to take place or when sale is finalized. Notification shall include a description of any interruptions in production or changes that may affect the status of certification, including product marking.

2) A new license agreement shall be signed and returned to Administrative Office, if the new owner is a new licensee.

3) The new owner shall be responsible for any outstanding certification and testing fees unpaid.

4) While it is encouraged for the new owners to utilize new IGCC/IGMA certification numbers, retention of the same certification number(s) from the prior owner shall be allowed. Regardless of prior testing history, testing will need to be completed during the next regular facility visit.

5) The above is only applicable if a majority of plant personnel and fabrication equipment is maintained. New prototype testing may be necessary if significant changes are made.

G.38 Inactive Certification

After initial certification, a licensee, with a certified product, may place a different (non-equivalent) certified product into an "inactive status". During inactive status, directory listing would still occur but with an "IN" designation. Regular retesting would not be required. Returning to a "Certified" status and labelling of production units would not be allowed without notification of the Administrative office. When returned to "Certified" status, an audit and witness fabrication of retest specimens must occur within 45 days of reactivation, unless current test reports are within one year of the report date. A product may only remain in "IN" for up to 5 years. (Adopted 1/30/2018)

12.6 CLASS IV - APPEALS, REVIEW AND DE-CERTIFICATION

G.13 Monetary

The administrator shall remove authorization to use the IGCC®/IGMA® permanent label from all of any licensee's products for failure to pay monies due to IGCC®/IGMA® within 60 days of invoice date (reference License Agreement A. 13 and B.6).

G.16 Failure to Comply

In cases where a routine test fails to comply with the specifications: (Modified 2/4/2015)

1) Upon notification of failure of routine test samples to reach the certified level, the licensee will be officially notified. Within 15 days the licensee must respond to the certified letter stating a retest fabrication is requested by paying all required administrative and test fees. If there is no response within 15 days, authorization to use the IGCC®/IGMA® permanent label will be removed.
   If the retest option is accepted:
   a) Request for retest option is granted by IGCC®/IGMA® only upon receipt in full of any administrative and retest fees within 15 days of date of mailing of the notification of failure.
   b) IGCC®/IGMA® will perform an audit and witness fabrication of retest specimens within 45 days of payment of fees in 1) above.
   c) Licensee must ship and deliver retest specimens to the testing laboratory within 4 weeks of fabrication.

2) There is to be no change in certification status during the retest period. All routine audits will continue. Sample fabrication for subsequent routine testing of the questionable model will be suspended pending the outcome of the retest.

3) If the retest units comply, they shall be considered as the next routine test.

4) If the retest units fail, the licensee is issued a cease and desist order on use of the label immediately.
5) The licensee may choose to accept certification at any level passed by the retest, although it might be a lower level than originally desired.

G.20 Authorization to use the IGCC®/IGMA® Permanent Label

Authorization to use the IGCC®/IGMA® permanent label will be removed if a routine audit discloses that a licensee is labeling units containing the same unauthorized construction for the third time.

G.22 Clarification of Due Process Appeal Process

Clarification of due process appeal process under License Agreement, Paragraph A.11:

> A Licensee's appeal from a final adverse decision by the Administrator, under License Agreement Paragraph A.11, shall in the first instance be to the Certification Appeals Subcommittee of the Certification Committee, which acts as an executive committee for the Certification Committee in order to provide a

prompt hearing for the Licensee and to act on the Licensee's appeal as quickly as possible. A decision by the Certification Appeals Subcommittee favorable to the Licensee shall be a final decision. A decision by the Certification Appeals Subcommittee adverse to the Licensee may be appealed to the full Certification Committee for a due process review and hearing. Such an appeal to the Certification Committee must be made in writing within 30 days of an adverse decision by the Certification Appeals Subcommittee and this appeal will be heard at the next meeting of the Certification Committee. Pending a hearing by the Certification Committee on such an appeal, the Licensee may maintain certification for the product at issue.

Committee rule to clarify guideline G.22 as adopted by the Certification Committee at minute 10.31.12.10

The Chairman of the Certification Committee may call for a special meeting of the Committee (with notice provided in the same way as for a special meeting of the Board of Governors under the Bylaws), and the Committee may conduct a special meeting (at the physical location identified in the notice or by use of conference telephone or other communication equipment by means of which all persons participating in the meeting can communicated with each other), with such special meeting to be at a date and time other than the next regularly scheduled meeting of the Committee, and at which special meeting any proper business of the Committee, including business under Procedural Guideline G.22, may be conducted. (Modified 10/31/2012)

SPECIFICATION USED FOR SEALED INSULATING GLASS

- **ASTM E2188**
- **ASTM E2189**
- **ASTM E2190**
- **ASTM E2649**

Specification may be obtained by contacting:

ASTM
100 Barr Harbor Drive
West Conshohocken, PA 19428-2959
Telephone: (610) 832-9585
Web Address: www.astm.org

Adopted: May 13, 1977
Revised: August 1, 1981
Revised: January 15, 1986
Revised: January 17, 2012

IGCC® STANDARD PARTICIPANT'S AGREEMENT APPLICABLE TO "SUPPLIER" (NON-IG UNIT MANUFACTURER), "PUBLIC INTEREST", "TEST LABORATORY", "TRADE ASSOCIATION", IG-UNIT "USER", "OTHER PERSON/ORGANIZATION WITH LEGITIMATE INTEREST" OR "CONSUMER" PARTICIPANTS IN IGCC®

This Agreement, made and effective this _____ day of _____, 20____, by and between _____ (hereinafter called "PARTICIPANT") and INSULATING GLASS CERTIFICATION COUNCIL, INC. (hereinafter called IGCC®), an Illinois not-for-profit tax-exempt corporation having its administrative office at 205 West Main Street, Sackets Harbor NY 13685, hereby provides as follows:

In consideration for being approved as an IGCC® Program Participant, and for the right to vote under the IGCC® Corporate Bylaws as an IGCC® Program Participant, I attest and agree, personally or on behalf of my employer, as follows:

A. IGCC Corporate Bylaws: I attest that I have read the IGCC ® Corporate Bylaws and that I or my employer have a legitimate interest in the goals of IGCC®, and I agree, personally or on behalf of my employer, to be bound by the IGCC® Corporate Bylaws.

B. Eligibility and Participant Category: I attest as follows, personally or on behalf of my employer, and request to be recognized, either personally or on behalf of my employer, as a PARTICIPANT in IGCC® in one of the following participation categories: Supplier (Non-IG Unit Manufacturer); Public Interest; Test Laboratory; Trade Association; IG-Unit User; Consumer; Other person/organization with legitimate interest in the purposes of the IGCC® corporation: _____ (Please indicate category).

1. I understand that IGCC®-approved test laboratory participants conducting tests in the IGCC® Certification Program also sign and are obligated to follow the provisions of the IGCC® standard test laboratory agreement, and that IGCC® IG-Unit manufacturer licensee-participants sign and are obligated to follow the provisions of the IGCC® standard license agreement for IG-unit manufacturers, and become participants in IGCC® thereby.

2. I attest that I do not manufacture IG-units nor am I employed by an IG-unit manufacturer (as such, neither I nor my employer qualify to become an IGCC®-IG Unit manufacturer-licensee). If my Participant category or eligibility changes (e.g. by beginning fabrication of IG units), this Agreement will be null and void.

C. Annual Fee: The annual fee for a Supplier (Non-IG Unit Manufacturer) Participant is $350.00 per company (as of 1/17/2012), subject to change by the IGCC® Board of Governors. There is no fee for public interest or consumer participants. On behalf of my employer, I agree this annual fee for a Supplier Participant (Non-IG Unit Manufacturer) in IGCC® shall be payable upon receipt of an invoice and shall be non-refundable.

D. Voting Rights and Responsibilities: (1) I understand and agree the IGCC®/IGMA certification program is structured and operated such that program policies and decisions are made in open parliamentary due-process committees whose meetings and actions shall be conducted with impartial review and implementation governance and administrative process. (2) I understand and agree that the IGCC® Certification Committee, as the primary working committee in which I may cast a vote as a Participant (if eligible under the Bylaws), shall operate free from commercial, financial or other interests that might conflict with IGCC's best interests and goals as set forth in IGCC's Corporate Bylaws, and I shall recuse myself from casting any vote in which a conflict of interest may exist. (3) I understand and agree that members of the Certification Committee provide a balance of interests where no single interest dominates. (4) I understand and agree each Participant is responsible for maintaining the confidentiality of specific information as may be requested and appropriate. (5) I understand and agree that the IGCC Board of Governors has ultimate governance authority under the IGCC Corporate Bylaws and applicable law, and that IGCC Participants and Participants' meetings are governed specifically by IGCC Corporate Bylaws Articles III and IV.

E. Dispute Resolution Process: I agree, personally or on behalf of my employer, to the following dispute resolution process, which is the same dispute resolution process applicable to IGCC® IG-Unit Manufacturer-Licensee Participants under the IGCC® standard license agreement for IG-Unit Manufacturers:

Any claim, complaint, dispute or related controversy asserted by me or my employer arising out of or regarding participation in IGCC® under this Agreement, or the operation of IGCC® under the IGCC® Corporate Bylaws, including the determination of the scope or applicability of this Agreement, and any arbitration pursuant to this standard IGCC® Participant's Agreement, shall be governed by the laws of the State of Illinois and the Illinois Not-for-Profit Corporation Act (under which IGCC® is incorporated), and the parties to this IGCC® Participant's Agreement agree that any such claim, complaint, dispute or related controversy not settled amicably between the parties will be resolved exclusively by submitting any such claim, complaint, dispute or related controversy (following a mandatory 20 day period in which no claim, complaint, dispute or related controversy shall be submitted to arbitration and during which the parties will seek a mutually agreeable resolution of any claim, complaint, dispute or related controversy) to binding contract arbitration, unless both parties consent to mediation or some other form of dispute resolution. In the event of contract arbitration, the arbitration will be conducted by a neutral third party arbitrator accepted by both parties. In the event that the parties do not agree to the appointment of any arbitrator, any claim, complaint, dispute or related controversy asserted by me or my employer regarding participation in IGCC® under this Agreement, or the operation of IGCC® under the IGCC® Corporate Bylaws, shall be resolved under the most-current Commercial Arbitration Rules of the American Arbitration Association. The place of the arbitration shall be in Illinois or some other mutually agreeable location. In any arbitration proceeding, reasonable discovery of evidence shall be allowed, and strict conformity to legal rules of evidence shall not be necessary, and the parties may offer evidence as is relevant and material to the dispute, which shall be considered in the arbitrator's reasonable discretion. The arbitrator, exercising his or her discretion, shall conduct the proceedings with a view to expediting the resolution of the claim, complaint, dispute or related controversy. The prevailing party in the arbitrator's Decision and Final Award shall be entitled

to recover reasonable attorney's fees and costs it may incur in connection with the arbitration proceeding. The arbitrator's Decision and Final Award shall be enforceable in any court of competent jurisdiction.

F. To maintain or commence Participant status, this Agreement needs to be signed by Participant. This Agreement supersedes and replaces any predecessor IGCC® Standard Participant's Agreement to which I or my employer is a party.

SIGNED and DATED:

PARTICIPANT: _____
Please sign and print name and title/authority; and date

Company/Business/Organization Name: _____

Street Address: _____

Telephone Number: _____; Fax Number: _____

Email Address: _____; Website: _____

Primary IGCC® Program contact for Participant: _____(Please print)

APPROVED and AGREED:

INSULATING GLASS CERTIFICATION COUNCIL, INC. (IGCC®)
P.O. Box 730, 205 West Main Street, Sackets Harbor, NY 13685
Telephone: (315) 646-2234 Fax: (315) 646-2297 Email: staff@amscert.com

By: _____(Please sign and date _____)
John G. Kent, IGCC® Administrative Manager

* A copy signed by IGCC® will be returned to Participant